| | | | | |
|---|---|---|---|---|
| **Test report no.:**<br>*Prüfbericht-Nr.:* | **CN23JF8R 001** | **Order No.:**<br>*Auftragsnr.:* | 244491443<br>P00946828 | **Page 1 of 25**<br>*Seite 1 von 25* |
| **Client reference no.:**<br>*Kunden-Referenz-Nr.:* | 1344616 | **Order date:**<br>*Auftragsdatum:* | 2023-01-31 | |
| **Client:**<br>*Auftraggeber:* | SolaX Power Network Technology (Zhejiang) Co., Ltd.<br>No. 288, Shizhu Road, Tonglu Economic Development Zone, Tonglu City, Zhejiang Province, 310000, P. R. China. | | | |
| **Test item:**<br>*Prüfgegenstand:* | Lithium ion Rechargeable Battery System | | | |
| **Identification / Type no.:**<br>*Bezeichnung / Typ-Nr.:* | T-BAT HS5.0, T-BAT HS7.5, T-BAT HS10.0, T-BAT HS12.5, T-BAT HS15.0, T-BAT HS17.5, T-BAT HS20.0, T-BAT HS22.5, T-BAT HS25.0, T-BAT HS27.5, T-BAT HS30.0, T-BAT HS32.5 | | | |
| **Order content:**<br>*Auftrags-Inhalt:* | TÜV mark approval | | | |
| **Test specification**<br>*Prüfgrundlage:* | IEC 62619: 2022, IEC 63056: 2020 | | | |
| **Date of sample receipt:**<br>*Wareneingangsdatum:* | 2023-01-31 | | | |
| **Test sample no:**<br>*Prüfmuster-Nr.:* | A003454485-001 | | | |
| **Testing period:**<br>*Prüfzeitraum:* | 2023-01-31 - 2023-03-19 | | | |
| **Place of testing:**<br>*Ort der Prüfung:* | TÜV Rheinland (Shanghai) Co., Ltd. | | | |
| **Testing laboratory:**<br>*Prüflaboratorium:* | TÜV Rheinland (Shanghai) Co., Ltd. | | | |
| **Test result*:**<br>*Prüfergebnis*:* | Pass | | | |

| | | | |
|---|---|---|---|
| **tested by:**<br>*geprüft von:* | Scola Chen | **authorized by:**<br>*genehmigt von:* | Stone Wang |
| **Date:** 2023-04-11<br>*Datum:* | | **Issue date:** 2023-04-11<br>*Ausstellungsdatum:* | |
| **Position** / *Stellung*: | Scola Chen/PE | **Position** / *Stellung*: | Stone Wang/Authorizer |

**Other:**
*Sonstiges:* See the following pages for General product information and comment.

**Condition of the test item at delivery:**
*Zustand des Prüfgegenstandes bei Anlieferung:*
Test item complete and undamaged
Prüfmuster vollständig und unbeschädigt

| | | | | |
|---|---|---|---|---|
| * Legend: | P(ass) = passed a.m. test specification(s) | F(ail) = failed a.m. test specification(s) | N/A = not applicable | N/T = not tested |
| * Legende: | P(ass) = entspricht o.g. Prüfgrundlage(n) | F(ail) = entspricht nicht o.g. Prüfgrundlage(n) | N/A = nicht anwendbar | N/T = nicht getestet |

**This test report only relates to the above mentioned test sample. Without permission of the test center this test report is not permitted to be duplicated in extracts. This test report does not entitle to carry any test mark.**
*Dieser Prüfbericht bezieht sich nur auf das o.g. Prüfmuster und darf ohne Genehmigung der Prüfstelle nicht auszugsweise vervielfältigt werden. Dieser Bericht berechtigt nicht zur Verwendung eines Prüfzeichens.*
V05

## Remarks
*Anmerkungen*

| | |
|---|---|
| **1** | The equipment used during the specified testing period was calibrated according to our test laboratory calibration program. The equipment fulfils the requirements included in the relevant standards. The traceability of the test equipment used is ensured by compliance with the regulations of our management system.<br>Detailed information regarding test conditions, equipment and measurement uncertainty is available in the test laboratory and could be provided on request.<br><br>*Alle eingesetzten Prüfmittel waren zum angegebenen Prüfzeitraum gemäß eines festgelegten Kalibrierungsprogramms unseres Prüfhauses kalibriert. Sie entsprechen den in den Prüfprogrammen hinterlegten Anforderungen. Die Rückverfolgbarkeit der eingesetzten Prüfmittel ist durch die Einhaltung der Regelungen unseres Managementsystems gegeben.*<br>*Detaillierte Informationen bezüglich Prüfkonditionen, Prüfequipment und Messunsicherheiten sind im Prüflabor vorhanden und können auf Wunsch bereitgestellt werden.* |
| **2** | As contractually agreed, this document has been signed digitally only. TUV Rheinland has not verified and unable to verify which legal or other pertaining requirements are applicable for this document. Such verification is within the responsibility of the user of this document. Upon request by its client, TUV Rheinland can confirm the validity of the digital signature by a separate document. Such request shall be addressed to our Sales department. An environmental fee for such additional service will be charged.<br><br>*Wie vertraglich vereinbart, wurde dieses Dokument nur digital unterzeichnet. Der TÜV Rheinland hat nicht überprüft, welche rechtlichen oder sonstigen diesbezüglichen Anforderungen für dieses Dokument gelten. Diese Überprüfung liegt in der Verantwortung des Benutzers dieses Dokuments. Auf Verlangen des Kunden kann der TÜV Rheinland die Gültigkeit der digitalen Signatur durch ein gesondertes Dokument bestätigen. Diese Anfrage ist an unseren Vertrieb zu richten. Eine Umweltgebühr für einen solchen zusätzlichen Service wird erhoben.* |
| **3** | Test clauses with remark of * are subcontracted to qualified subcontractors and descripted under the respective test clause in the report. Deviations of testing specification(s) or customer requirements are listed in specific test clause in the report.<br><br>*Prüfklausel mit der Note * wurden an qualifizierte Unterauftragnehmer vergeben und sind unter der jeweiligen Prüfklausel des Berichts beschrieben. Abweichungen von Prüfspezifikation(en) oder Kundenanforderungen sind in der jeweiligen Prüfklausel im Bericht aufgeführt.* |
| **4** | The decision rule for statements of conformity, based on numerical measurement results, in this test report is based on the “Zero Guard Band Rule” and “Simple Acceptance” in accordance with ILAC G8:2019 and IEC Guide 115:2021, unless otherwise specified in the applied standard mentioned on Page 1 of this report or requested by the customer. This means that measurement uncertainty is not taken in account and hence also not declared in the test report. For additional information to the resulting risk based of this decision rule please refer to ILAC G8:2019.<br><br>*Die Entscheidungsregel für Konformitätserklärungen basierend auf numerischen Messergebnisen in diesem Prüfbericht basiert auf der "Null-Grenzwert-Regel" und der "Einfachen Akzeptanz" gemäß ILAC G8:2019 und IEC Guide 115:2021, es sei denn, in der auf Seite 1 dieses Berichts genannten angewandten Norm ist etwas anderes festgelegt oder vom Kunden gewünscht. Dies bedeutet, dass die Messunsicherheit nicht berücksichtigt wird und daher auch nicht im Prüfbericht angegeben wird. Zu weiteren Informationen bezueglich des Risikos durch diese Entscheidungsregel siehe ILAC G8:2019.* |
| **5** | |

**Test Report issued under the responsibility of:**

TÜVRheinland®

# TEST REPORT
# IEC 62619
# Secondary cells and batteries containing alkaline or other non-acid electrolytes – Safety requirements for secondary lithium cells and batteries, for use in industrial applications

| | |
|---|---|
| **Report Number.....:** | CN23JF8R 001 |
| **Date of issue .....:** | See cover page |
| **Total number of pages.....:** | See cover page |
| **Name of Testing Laboratory preparing the Report.....:** | TÜV Rheinland (Shanghai) Co., Ltd. |
| **Applicant's name .....:** | SolaX Power Network Technology (Zhejiang)Co., Ltd. |
| **Address .....:** | No. 288, Shizhu Road, Tonglu Economic Development Zone, Tonglu City, Zhejiang Province, 310000, P. R. China. |
| **Test specification:** | |
| **Standard.....:** | IEC 62619: 2022 |
| **Test procedure.....:** | TÜV mark approval |
| **Non-standard test method.....:** | N/A |
| **TRF template used.....:** | IECEE OD-2020-F1:2021, Ed.1.4 |
| **Test Report Form No. .....:** | IEC62619B |
| **Test Report Form(s) Originator....:** | UL(Demko) |
| **Master TRF .....:** | Dated 2022-06-23 |

**Copyright © 2022 IEC System of Conformity Assessment Schemes for Electrotechnical Equipment and Components (IECEE System). All rights reserved.**

This publication may be reproduced in whole or in part for non-commercial purposes as long as the IECEE is acknowledged as copyright owner and source of the material. IECEE takes no responsibility for and will not assume liability for damages resulting from the reader's interpretation of the reproduced material due to its placement and context.

If this Test Report Form is used by non-IECEE members, the IECEE/IEC logo and the reference to the CB Scheme procedure shall be removed.

**This report is not valid as a CB Test Report unless signed by an approved IECEE Testing Laboratory and appended to a CB Test Certificate issued by an NCB in accordance with IECEE 02.**

**General disclaimer:**

The test results presented in this report relate only to the object tested.
This report shall not be reproduced, except in full, without the written approval of the Issuing NCB. The authenticity of this Test Report and its contents can be verified by contacting the NCB, responsible for this Test Report.

| | |
|---|---|
| **Test item description .....:** | Lithium ion Rechargeable Battery System |
| **Trade Mark(s) .....:** | SOLAX POWER |
| **Manufacturer .....:** | Same as applicant |
| **Model/Type reference .....:** | See cover page |
| **Ratings .....:** | See copy of marking label and model list. |

| | | | |
|---|---|---|---|
| **Responsible Testing Laboratory (as applicable), testing procedure and testing location(s):** | | | |
| ☐ | **CB Testing Laboratory:** | | |
| **Testing location/ address .....:** | | | |
| **Tested by (name, function, signature) .....:** | | | |
| **Approved by (name, function, signature) ..:** | | | |
| ☐ | **Testing procedure: CTF Stage 1:** | | |
| **Testing location/ address .....:** | | | |
| **Tested by (name, function, signature) .....:** | | | |
| **Approved by (name, function, signature) ..:** | | | |
| ☐ | **Testing procedure: CTF Stage 2:** | | |
| **Testing location/ address .....:** | | | |
| **Tested by (name + signature).....:** | | | |
| **Witnessed by (name, function, signature) .:** | | | |
| **Approved by (name, function, signature) ..:** | | | |
| ☐ | **Testing procedure: CTF Stage 3:** | | |
| ☐ | **Testing procedure: CTF Stage 4:** | | |
| **Testing location/ address .....:** | | | |
| **Tested by (name, function, signature) .....:** | | | |
| **Witnessed by (name, function, signature) .:** | | | |
| **Approved by (name, function, signature) ..:** | | | |
| **Supervised by (name, function, signature) :** | | | |

**List of Attachments (including a total number of pages in each attachment):**

- Attachment 1: IEC 63056 Report (13 pages)
- Attachment 2: Photo document (18 pages)
- Attachment 3: CDF (8 pages)

**Summary of testing:**

**Tests performed (name of test and test clause):**

| Clause(s) | Test(s) |
|---|---|
| 7.2.3.3 | Edge and corner drop test (battery system) |
| 8.2.2 | Overcharge control of voltage (battery system) |
| 8.2.3 | Overcharge control of current (battery system) |
| 8.2.4 | Overheating control (battery system) |

**Testing location:**

TÜV Rheinland (Shanghai) Co., Ltd.
No.177, 178, Lane 777 West Guangzhong Road, Jing'an District,Shanghai, China

**Summary of compliance with National Differences (List of countries addressed):**

☒ **The product fulfils the requirements of IEC 62619: 2022 and EN 62619: 2022 (insert standard number and edition and delete the text in parenthesis, leave it blank or delete the whole sentence, if not applicable)**

**Use of uncertainty of measurement for decisions on conformity (decision rule) :**

☒ No decision rule is specified by the IEC standard, when comparing the measurement result with the applicable limit according to the specification in that standard. The decisions on conformity are made without applying the measurement uncertainty ("simple acceptance" decision rule, previously known as "accuracy method").

☐ Other: (to be specified, for example when required by the standard or client, or if national accreditation requirements apply)

**Information on uncertainty of measurement:**
The uncertainties of measurement are calculated by the laboratory based on application of criteria given by OD-5014 for test equipment and application of test methods, decision sheets and operational procedures of IECEE.

IEC Guide 115 provides guidance on the application of measurement uncertainty principles and applying the decision rule when reporting test results within IECEE scheme, noting that the reporting of the measurement uncertainty for measurements is not necessary unless required by the test standard or customer.

Calculations leading to the reported values are on file with the NCB and testing laboratory that conducted the testing.

**Copy of marking plate:**

**The artwork below may be only a draft. The use of certification marks on a product must be authorized by the respective NCBs that own these marks.**

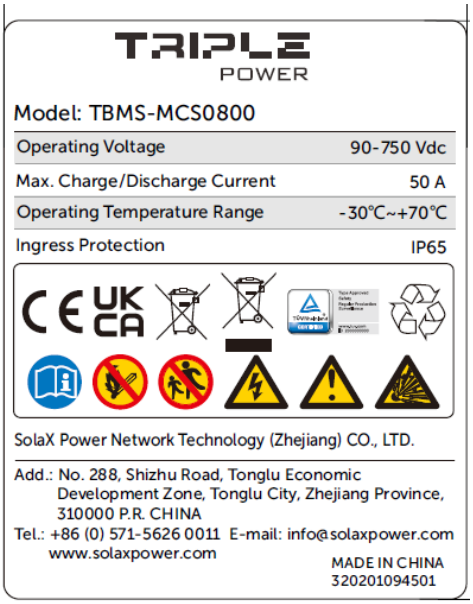


Label for master control of battery system

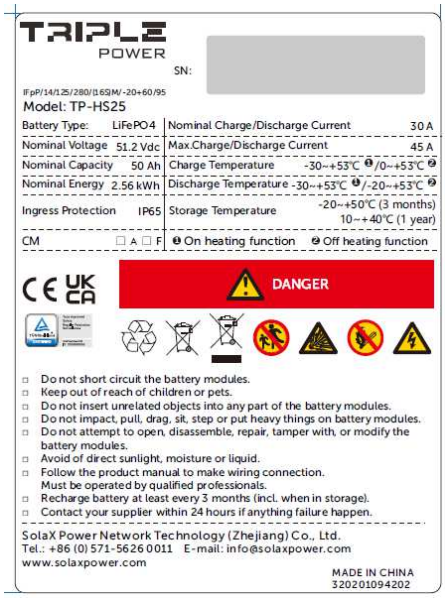


Label for Slave control of battery system

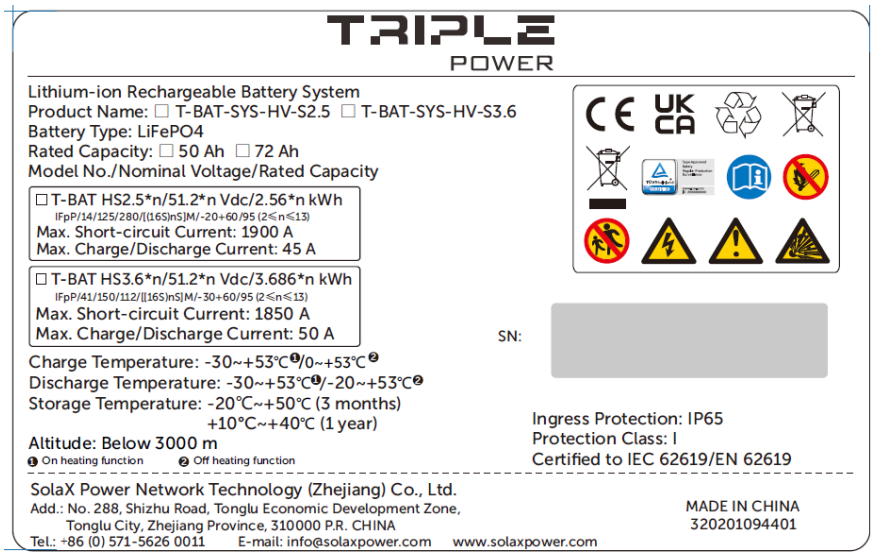


Label for battery system

| | |
|---|---|
| **Test item particulars .....:** | |
| **Classification of installation and use.....:** | To be defined in the end product |
| **Supply Connection .....:** | Not directly connected to the mains |
| **.....:** | |
| **Possible test case verdicts:** | |
| **- test case does not apply to the test object..... :** | N/A |
| **- test object does meet the requirement..... :** | P (Pass) |
| **- test object does not meet the requirement..... :** | F (Fail) |
| **Testing ..... :** | |
| **Date of receipt of test item..... :** | See cover page |
| **Date (s) of performance of tests ..... :** | See cover page |

**General remarks:**

"(See Enclosure #)" refers to additional information appended to the report.
"(See appended table)" refers to a table appended to the report.

**Throughout this report a ☐ comma / ☒ point is used as the decimal separator.**

**Manufacturer's Declaration per sub-clause 4.2.5 of IECEE 02:**

| | |
|---|---|
| The application for obtaining a CB Test Certificate includes more than one factory location and a declaration from the Manufacturer stating that the sample(s) submitted for evaluation is (are) representative of the products from each factory has been provided.....: | ☐ **Yes**<br>☒ **Not applicable** |

**When differences exist; they shall be identified in the General product information section.**

| | |
|---|---|
| **Name and address of factory (ies)..... :** | SolaX Power Network Technology (Zhejiang) Co., Ltd.<br>No. 288, Shizhu Road, Tonglu Economic Development Zone, Tonglu City, Zhejiang Province, 310000, P. R. China. |

**General product information and other remarks:**

Product Description:

The product include 12 type designations in model series of Lithium ion Rechargeable Battery System, which includes one master BMS and several battery modules in series connection. In each battery module, there are 16 cells in series connection. The Battery system has 12 type designations according to the quantity of battery modules connection in series from 2 to 13 pcs.

The function of master control unit is the battery management system. The master control unit gets the signal and data information of cell voltage and temperature through the sampling ports.

The IP rating of the Lithium ion Rechargeable Battery System is IP65 and the Pollution Degree is considered as PD 2 inside, which specified by the manufacturer.

The insulation between the DC (Battery) power circuit and the metal enclosure is basic insulation (BI) and the one between the DC (Battery) power circuit and communication circuit is reinforced insulation (RI) or double insulation (DI).

This battery system contains heating films in battery modules. The closing and opening of the heating function will be set through the IPC or inverter.

- When the heating function state was off:

  The battery system charging temperature range is: 0 to 53°C; discharging temperature range is -20 to 53°C
- When the heating function state was on:
  1. Cell actual operate temperature range: charging temperature: 0 to 53°C; discharging temperature: -20 to 53°C
  2. Outside ambient temperature range: charging temperature: -30 to 53°C; discharging temperature: -30 to 53°C
  3. During charging: when temperature range is -30~0°C, the heating film will heating cells until cell temperature reach to 2°C, then the heating will stop work
  4. During discharging: when temperature range is -30~-20°C, the heating film will heating cells until cell temperature reach to -18°C, then the heating will stop work.
  5. One battery module has four heating films, and all of the films was connect in series. The heating films will take power from inverter, and the voltage is the same with the maximum voltage of the battery system.

  Note: The heating function of battery system was declare and verified by client.

The system block diagram is outlined as below.

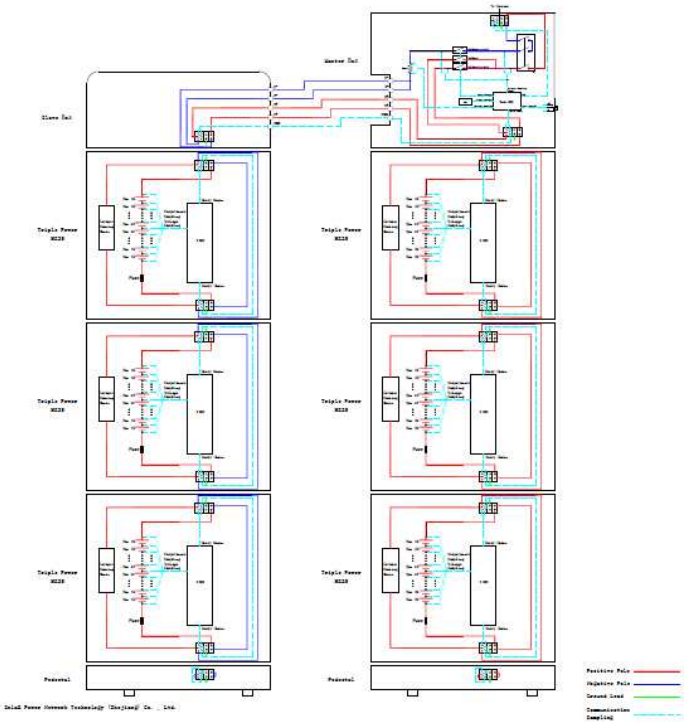

Model list:

| T-BAT-SYS-HV-S25 | | | | | | | | | | | | |
|---|---|---|---|---|---|---|---|---|---|---|---|---|
| Type/model | T-BAT HS5.0 | T-BAT HS7.5 | T-BAT HS10.0 | T-BAT HS12.5 | T-BAT HS15.0 | T-BAT HS17.5 | T-BAT HS20.0 | T-BAT HS22.5 | T-BAT HS25.0 | T-BAT HS27.5 | T-BAT HS30.0 | T-BAT HS32.5 |
| Battery Type | 50Ah (LFP) cell | | | | | | | | | | | |
| Component | TBMS-MCS0800*1 + TP-HS25 *2 | TBMS-MCS0800*1 + TP-HS25 *3 | TBMS-MCS0800*1 + TP-HS25 *4 | TBMS-MCS0800*1 + TP-HS25 *5 | TBMS-MCS0800*1 + TP-HS25 *6 | TBMS-MCS0800*1 + TP-HS25 *7 | TBMS-MCS0800*1 + TP-HS25 *8 | TBMS-MCS0800*1 + TP-HS25 *9 | TBMS-MCS0800*1 + TP-HS25 *10 | TBMS-MCS0800*1 + TP-HS25 *11 | TBMS-MCS0800*1 + TP-HS25 *12 | TBMS-MCS0800*1 + TP-HS25 *13 |
| Nominal Voltage [V] | 102.4 | 153.6 | 204.8 | 256.0 | 307.2 | 358.4 | 409.6 | 460.8 | 512.0 | 563.2 | 614.4 | 665.6 |
| Operating Voltage Range [V] | 90-116 | 135-174 | 180-232 | 225-290 | 270-349 | 315-406 | 360-465 | 405-522 | 450-580 | 495-636 | 540-695 | 585-750 |
| Battery Module 1P16S = 1 Module) | 2 | 3 | 4 | 5 | 6 | 7 | 8 | 9 | 10 | 11 | 12 | 13 |
| Rated Capacity [Ah] | 50 | | | | | | | | | | | |
| Total Storage Energy [kWh] | 5.12 | 7.68 | 10.24 | 12.8 | 15.36 | 17.92 | 20.48 | 23.04 | 25.6 | 28.16 | 30.72 | 33.28 |
| Usable Energy (90%DOD) [kWh] | 4.6 | 6.9 | 9.2 | 11.5 | 13.8 | 16.1 | 18.4 | 20.7 | 23.0 | 25.3 | 27.6 | 30.0 |
| Standard Power [kW] | 3.1 | 4.6 | 6.1 | 7.7 | 9.2 | 10.8 | 12.3 | 13.8 | 15.4 | 16.9 | 18.4 | 20.0 |
| Max. Power [kW] | 4.608 | 6.912 | 9.216 | 11.52 | 13.824 | 16.128 | 18.432 | 20.736 | 23.04 | 25.344 | 27.648 | 29.952 |
| Nominal Current [A] | 30 | | | | | | | | | | | |
| Maximum Charging Current [A] | 45 | | | | | | | | | | | |
| Maximum Discharging | 45 | | | | | | | | | | | |

| | | | | | | | | | | | | |
|---|---|---|---|---|---|---|---|---|---|---|---|---|
| Current [A] | | | | | | | | | | | | |
| Cycle Life [90% DOD] | 6000 Cycles | | | | | | | | | | | |
| Charge Temperature Range of ambient temperature [°C] | 0 to 53 (Off heating function)<br>-30 to 53 (On heating function) | | | | | | | | | | | |
| Discharge Temperature Range of ambient temperature [°C] | -20 to 53 (Off heating function)<br>-30 to 53 (On heating function) | | | | | | | | | | | |
| Storage Temperature [°C] | -20°C to 50°C (3 months)<br>10°C to 40°C (1 year) | | | | | | | | | | | |
| Dimension (L x W x H) [mm] | TBMS-MCS0800: 510*365*157,<br>TP-HS25: 510*365*152,<br>Pedestal:510*365*90,<br>Series Box: 510*365*157 | | | | | | | | | | | |
| Weight [kg] | 13kg+27kg*2+9kg | 13kg+27kg*3+9kg | 13kg+27kg*4+9kg | 13kg+27kg*5+9kg | 13kg+27kg*6+9kg | 13kg+27kg*7+9kg | 13kg+27kg*8+9kg | 13kg+27kg*9+9kg | 13kg+27kg*10+10kg+18kg | 13kg+27kg*11+10kg+18kg | 13kg+27kg*12+10kg+18kg | 13kg+27kg*13+10kg+18kg |
| Installation | Stackable level package | | | | | | | | | | | |
| Enclosure Protection (IP) | IP65 | | | | | | | | | | | |
| Cooling Type | Natural cooling | | | | | | | | | | | |
| Altitude [m] | Below 3000 | | | | | | | | | | | |

| IEC 62619 | | | |
|---|---|---|---|
| Clause | Requirement + Test | Result - Remark | Verdict |
| **4** | **PARAMETER MEASUREMENT TOLERANCES** | | P |
| | Parameter measurement tolerances | | P |

| | | | |
|---|---|---|---|
| **5** | **GENERAL SAFETY CONSIDERATIONS** | | P |
| **5.1** | **General** | | P |
| | Cells and batteries are safe under conditions of both intended use and reasonably foreseeable misuse…: | Clause 6, Clause 7, 8.1, and 8.2. See also CDF attachment for Critical components information | P |
| | Reduce the risk of injuries from moving parts | | P |
| **5.2** | **Insulation and wiring** | | P |
| | Voltage, current, altitude, and humidity requirements | | P |
| | Adequate clearances and creepage distances between connectors and live parts at different voltages or between live parts and non-current-carrying accessible parts | | P |
| | Protect from hazardous live parts, including during installation | | P |
| | The mechanical integrity of internal connections | | P |
| **5.3** | **Venting** | | P |
| | Pressure relief function | | P |
| | Encapsulation used to support cells within an outer casing | | P |
| **5.4** | **Temperature/voltage/current management** | | P |
| | The design prevents abnormal temperature-rise | Overcharge, over current and overheating proof circuit used in this battery. | P |
| | Voltage, current, and temperature limits of the cells | | P |
| | Specifications and charging instructions for equipment manufacturers | | P |
| **5.5** | **Terminal contacts of the battery pack and/or battery system** | | P |
| | Polarity marking(s) | | P |
| | Polarity marking not provided for keyed external connector | | P |
| | Capability to carry the maximum anticipated current | | P |
| | External terminal contact surfaces | | P |

| IEC 62619 | | | |
|---|---|---|---|
| Clause | Requirement + Test | Result - Remark | Verdict |
| | Terminal contacts are arranged to minimize the risk of short circuits | | P |
| **5.6** | **Assembly of cells, modules, or battery packs into battery systems** | | P |
| 5.6.1 | General | | P |
| | Independent control and protection method(s) | Battery system has independent control and protective functions, and BMS is integrated into battery system. | P |
| | Recommendations of cell operating limits, mounting advice, storage conditions and other design recommendations by the cell manufacturer | | P |
| | Batteries designed for the selective discharge of a portion of their series connected cells | | N/A |
| | Protective circuit component(s) and consideration to the end-device application | | P |
| 5.6.2 | Battery system design | | P |
| | The voltage control function | | P |
| | Maximum charging/discharging current of the cell are not exceeded | | P |
| **5.7** | **Operating region of lithium cells and battery systems for safe use** | | P |
| | The cell operating region.....: | | P |
| | Designation of battery system to comply with the cell operating region | Information mentioned in manufacturer's specifications. | P |
| **5.8** | **System lock (or system lock function)** | | P |
| | Non-resettable function to stop battery operation | | P |
| | Manual with procedure for resetting of battery operation | | P |
| | Emergency battery final discharge | | P |
| **5.9** | **Quality plan** | | P |
| | Manufacturing quality plan (for example: ISO9001, etc.) prepared and implemented.....: | ISO 9001:2015 certification provided. | P |
| | The process capabilities and the process controls | | P |

| | | |
|---|---|---|
| **6** | **TYPE TEST CONDITIONS** | P |
| **6.1** | **General** | P |
| **6.2** | **Test items** | P |

| IEC 62619 | | | |
|---|---|---|---|
| Clause | Requirement + Test | Result - Remark | Verdict |
| | Cells or batteries that are not more than six months old (See Table 1 of IEC 62619) | | P |
| | Capacity confirmation of the cells or batteries | | P |
| | Default ambient temperature of test, 25 °C ± 5 °C | Tests were carried out in an ambient temperature of 25±5°C. | P |

| | | | |
|---|---|---|---|
| **7** | **SPECIFIC REQUIREMENTS AND TESTS** | | P |
| **7.1** | **Charging procedure for test purposes** | | P |
| | The battery discharged to a specified final voltage prior to charging | | P |
| | The cells or batteries charged using the method specified by the manufacturer ..... : | The method mentioned in manufacturer's specifications. | P |
| **7.2** | **Reasonably foreseeable misuse** | | P |
| 7.2.1 | External short-circuit test (cell or cell block) | Approval cell used. | N/A |
| | Short circuit with total resistance of 30 m ± 10 m at 25 °C ± 5 °C | | N/A |
| | Results: no fire, no explosion | | N/A |
| 7.2.2 | Impact test (cell or cell block) | Approval cell used. | N/A |
| | Cylindrical cell, longitudinal axis impact | | N/A |
| | Prismatic cell, longitudinal axis and lateral axis impact | | N/A |
| | Results: no fire, no explosion. | | N/A |
| 7.2.3 | Drop test (cell or cell block, and battery system) | | P |
| 7.2.3.1 | General | | P |
| 7.2.3.2 | Whole drop test (cell or cell block, and battery system) | Approval cell used. | N/A |
| | Description of the Test Unit..... : | | — |
| | Mass of the test unit (kg)..... : | | — |
| | Height of drop (m)..... : | | — |
| | Results: no fire, no explosion | | N/A |
| 7.2.3.3 | Edge and corner drop test (cell or cell block, and battery system) | | P |
| | Description of the Test Unit..... : | BMS: TBMS-MCS0800<br>Module: TP-HS25 | — |

| IEC 62619 | | | |
|---|---|---|---|
| Clause | Requirement + Test | Result - Remark | Verdict |
| | Mass of the test unit (kg)..... : | BMS: 13kg<br>Battery Module: 27kg | — |
| | Height of drop (m)..... : | 0.1 | — |
| | Results: no fire, no explosion | No fire, no explosion. | P |
| 7.2.4 | Thermal abuse test (cell or cell block) | Approval cell used. | N/A |
| | Results: no fire, no explosion | | N/A |
| 7.2.5 | Overcharge test (cell or cell block) | Approval cell used. | N/A |
| | For those battery systems that are provided with only a single protection for the charging voltage control | | — |
| | Results: no fire, no explosion ..... : | | N/A |
| 7.2.6 | Forced discharge test (cell or cell block) | Approval cell used. | N/A |
| | Cells connected in series in the battery system..... : | | N/A |
| | Redundant or single protection for discharge voltage control provided in battery system ..... : | | N/A |
| | Target Voltage..... : | | N/A |
| | Maximum discharge current of the cell, Im..... : | | N/A |
| | Discharge current for forced discharge, 1.0 It..... : | | N/A |
| | Discharging time, t = (1 It / Im ) x 90 (min.)..... : | | N/A |
| | Results: no fire, no explosion ..... : | | N/A |
| **7.3** | **Considerations for internal short-circuit – Design evaluation** | | **N/A** |
| 7.3.1 | General | Approval cell used. | N/A |
| 7.3.2 | Internal short-circuit test (cell) | | N/A |
| | Samples preparation procedure:<br>In accordance with Clause A.5 and A.6 of IEC 62133-2:2017 | | N/A |
| | Tested per 7.3.2 b) in an ambient temperature of 25 °C ± 5 °C. | | N/A |
| | The appearance of the short-circuit location recorded by photograph or other means..... : | | — |
| | The pressing was stopped<br>- When a voltage drop of 50 mV was detected; or | | N/A |
| | - The pressing force of 800 N (cylindrical cells) or 400 N (prismatic cells) was reached | | N/A |
| | Results: no fire ..... : | | N/A |
| 7.3.3 | Propagation test (battery system) | 7.3.2 tested for cell | N/A |

| IEC 62619 | | | |
|---|---|---|---|
| Clause | Requirement + Test | Result - Remark | Verdict |
| | Method to create a thermal runaway in one cell ... : | | N/A |
| | Results: No external fire from the battery system, no battery case rupture..... : | | N/A |

| | | | |
|---|---|---|---|
| **8** | **BATTERY SYSTEM SAFETY (CONSIDERING FUNCTIONAL SAFETY)** | | P |
| **8.1** | **General requirements** | | P |
| | Functional safety analysis for critical controls | Functional safety evaluated acc. to IEC 60730-1 Annex H | P |
| | Conduct of a process hazard analysis for both the cell manufacturing process and the battery system manufacturing process | See above. | P |
| | Conduct of risk assessment and mitigation of the battery system | Considered | P |
| **8.2** | **Battery management system (or battery management unit)** | | **P** |
| 8.2.1 | Requirements for the BMS | | P |
| | The safety integrity level (SIL) target of the BMS | | N/A |
| | The charge control evaluated by tests in clauses 8.2.2 to 8.2.4 | | P |
| 8.2.2 | Overcharge control of voltage (battery system) | | P |
| | The exceeded charging voltage applied to the whole battery system | | P |
| | The exceeded charging voltage applied to only a part of the battery system, such as the cell(s) ..... : | | N/A |
| | Results: no fire, no explosion ..... : | See Table 8.2.2. | P |
| | The BMS terminated the charging before exceeding the upper limit charging voltage | | P |
| 8.2.3 | Overcharge control of current (battery system) | | P |
| | Results: no fire, no explosion ..... : | See Table 8.2.3 | P |
| | The BMS detected the overcharging current and controlled the charging to a level below the maximum charging current | | P |
| 8.2.4 | Overheating control (battery system) | | P |
| | The cooling system, if provided, was disconnected | | N/A |
| | Elevated temperature for charging, 5 °C above maximum operating temperature..... : | | P |
| | Results: no fire, no explosion .....: | See Table 8.2.4 | P |

| IEC 62619 | | | |
|---|---|---|---|
| Clause | Requirement + Test | Result - Remark | Verdict |
| | The BMS detected the overheat temperature and terminated charging | | P |
| | The battery system operated as designed during test | | P |
| **9** | **EMC** | | N/A |
| | Battery system fulfil EMC requirements of the end-device application..... : | Considered in end products | N/A |
| **10** | **INFORMATION FOR SAFETY** | | P |
| | The cell manufacturer provides information about current, voltage and temperature limits of their products | | P |
| | The battery system manufacturer provides information regarding how to mitigate hazards to equipment manufacturers or end-users. | | P |
| **11** | **MARKING AND DESIGNATION (REFER TO CLAUSE 5 OF IEC 62620)** | | P |
| | The marking items shown in Table 1 in IEC 62620 indicated on the cell, battery system or instruction manual. | | P |
| | Cell or battery system has clear and durable markings | | P |
| | Cell designation | | P |
| | Battery designation | See copy of marking plate. | P |
| | Battery structure formulation | See above. | P |
| **12** | **PACKAGING AND TRANSPORT** | | P |
| | Refer to Annex D | Considered | P |
| **ANNEX A** | **OPERATING REGION OF CELLS FOR SAFE USE** | | P |
| A.1 | General | | P |
| A.2 | Charging conditions for safe use | | P |
| A.3 | Consideration on charging voltage | | P |
| A.4 | Consideration on temperature | | P |

| IEC 62619 | | | |
|---|---|---|---|
| Clause | Requirement + Test | Result - Remark | Verdict |
| A.5 | High temperature range | | P |
| A.6 | Low temperature range | | P |
| A.7 | Discharging conditions for safe use | | P |
| A.8 | Example of operating region | | P |

| | | | |
|---|---|---|---|
| **ANNEX B** | **PROCEDURE OF 7.3.3 PROPAGATION TEST BY LASER IRRADIATION** | | **N/A** |
| **B.1** | **General** | | N/A |
| **B.2** | **Test conditions** | | N/A |
| B.2.1 | Cell test (preliminary test) | | N/A |
| | The cell fully charged according to the manufacturer recommended conditions..... : | | — |
| | Laser irradiation point on the cell..... : | | — |
| | Output power of laser irradiation..... : | | — |
| | Tested in an ambient temperature of 25 °C ± 5 °C | | N/A |
| | Repeat of cell test for 3 times | | N/A |
| B.2.2 | Battery system test (main test) | | N/A |
| | The battery system fully charged according to the manufacturer recommended conditions..... : | | — |
| | Target cell to be laser irradiated ..... : | | — |
| | The irradiation point on the target cell same or similar as that on the cell test | | |
| | Output power of laser irradiation..... : | | — |
| | Tested in an ambient temperature of 25 °C ± 5 °C | | N/A |

| | | | |
|---|---|---|---|
| **ANNEX C** | **PROCEDURE OF 7.3.3 PROPAGATION TEST BY METHODS OTHER THAN LASER** | | N/A |
| C.1 | General | | N/A |
| C.2 | Test conditions: | | N/A |
| | – The battery fully charged according to the manufacturer recommended conditions..... : | | — |
| | – Target cell forced into thermal runaway ..... : | | — |
| | – A specially prepared sample (e.g. a heater or a hole for nail penetration provided) used for ease of testing..... : | | — |

| IEC 62619 | | | |
|---|---|---|---|
| Clause | Requirement + Test | Result - Remark | Verdict |
| C.3 | Method used for initiating the thermal runaway.<br>1) Heater (Heater, Burner, Laser, Inductive heating<br>2) Overcharge<br>3) Nail penetration of the cell<br>4) Combination of above methods<br>5) Other methods ..... : | | — |

| | | | |
|---|---|---|---|
| **ANNEX D** | **PACKAGING AND TRANSPORT** | | P |
| | The materials and pack design chosen in a way as to prevent the development of unintentional electrical conduction, corrosion of the terminals and ingress of environmental contaminants | | P |
| | Regulations concerning international transport of secondary lithium batteries | | P |

| IEC 62619 | | | |
|---|---|---|---|
| Clause | Requirement + Test | Result - Remark | Verdict |

| 7.2.1 | TABLE: External short-circuit test (cell or cell block) | | | | N/A |
|---|---|---|---|---|---|
| **Sample No.** | **Ambient (at 25°C ± 5°C)** | **OCV at start of test (V dc)** | **Resistance of Circuit (mΩ)** | **Maximum Case Temperature Rise ΔT (°C)** | **Results** |
| - | - | - | - | - | - |
| - | - | - | - | - | - |
| - | - | - | - | - | - |

**Supplementary information:**

A – No fire or Explosion
B – Fire
C – Explosion
D – The test was completed after 6 h
E – The test was completed after the cell casing cooled to 20% of the maximum temperature rise
F – Other (Please explain):___

| 7.2.5 | TABLE: Overcharge test (cell or cell block) | | | | | N/A |
|---|---|---|---|---|---|---|
| **Sample No.** | **OCV at start of test (V dc)** | **OCV at end of test (V dc)** | **Measured Maximum Charging Current (A)** | **Measured Maximum Charging Voltage (V dc)** | **Max. Cell Case Temperature, (°C)** | **Results** |
| - | - | - | - | - | - | - |
| - | - | - | - | - | - | - |
| - | - | - | - | - | - | - |

**Supplementary information:**

Results:
A – No fire or Explosion
B – Fire
C – Explosion
D – Test concluded when temperature reached a steady state condition
E – Test concluded when temperature returned to ambient
F – Other (Please explain): _____

| IEC 62619 | | | |
|---|---|---|---|
| Clause | Requirement + Test | Result - Remark | Verdict |

| 7.2.6 | TABLE: Forced discharge test (cell or cell block) | | | | N/A |
|---|---|---|---|---|---|
| **Sample No.** | **OCV before applying reverse charge, (V dc)** | **Target Voltage (V dc)** | **Measured Reverse Charge Current It, (A)** | **Total Time for Reversed Charge Application (min)** | **Results** |
| - | - | - | - | - | - |
| - | - | - | - | - | - |
| - | - | - | - | - | - |

**Supplementary information:**

Results:
A – No fire or Explosion
B – Fire
C – Explosion
D – Other (Please explain): ___

| 7.3.2 | TABLE: Internal short-circuit test (cell) | | | N/A |
|---|---|---|---|---|
| **Sample No.** | **OCV at start of test, (V dc)** | **Particle location 1)** | **Maximum applied pressure, (N)** | **Results** |
| - | - | - | - | - |
| - | - | - | - | - |
| - | - | - | - | - |
| - | - | - | - | - |
| - | - | - | - | - |

**Supplementary information:**

**8)**..... Identify one of the following**:**
1: Nickel particle inserted between positive and negative (active material) coated area.
2: Nickel particle inserted between positive aluminium foil and negative active material coated area.

**Results:**
A – No fire or explosion
B – Fire
C – Explosion
D – Test concluded when 50 mV voltage drop occurred prior to reaching force limit
E – Test concluded when 800/400 N pressure was reached and 50 mV voltage drop was not achieved
F – Test was concluded when fire or explosion occurred
G – Other (Please explain): __

| IEC 62619 | | | |
|---|---|---|---|
| Clause | Requirement + Test | Result - Remark | Verdict |

| 7.3.3 | TABLE: Propagation test (battery system) | | | | N/A |
|---|---|---|---|---|---|
| **Sample No.** | **OCV of Battery System Before Test, (V dc)** | **OCV of Target Cell Before Test, (V dc)** | **Maximum Cell Case Temperature, (°C)** | **Maximum DUT Enclosure Temperature, (°C)** | **Results** |
| - | - | - | - | - | - |
| - | - | - | - | - | - |
| - | - | - | - | - | - |

| Method of cell failure 1) | Location of target cell | Area for fire protection ($m^2$) |
|---|---|---|
| - | - | - |
| - | - | - |
| - | - | - |

**Supplementary information:**

**1)** Cell can be failed through laser exposure, applied heat, overcharge, nail penetration or combinations of these failures or other acceptable methods. See supporting documentation for details on cell failure method

**2)** If the battery system has no outer covering, the manufacturer is required to specify the area for fire protection.

Results:
A – No fire external to DUT enclosure or area for fire protection or no battery case rupture
B – Fire external to DUT enclosure or area for fire protection
C – Explosion
D – Battery case rupture
E – Other (Please explain): __

| IEC 62619 | | | |
|---|---|---|---|
| Clause | Requirement + Test | Result - Remark | Verdict |

| 8.2.2 | TABLE: Overcharge control of voltage (battery system) | | | | P |
|---|---|---|---|---|---|
| **Sample No.** | **OCV at start of test for Cell/Cell Blocks, (V dc)** | **Maximum Charging Current, (A)** | **Max. Charging Voltage, (V dc)** | **Max. Voltage of Cell/Cell Blocks, (V dc)** | **Results** |
| 2023020019-001 | 2.922 to 3.012 | 45 | 116 | 3.639 | A, D, F |
| - | - | - | - | - | - |
| - | - | - | - | - | - |

| | Charge Voltage Applied Battery System: 1) | |
|---|---|---|
| | **Whole** | **Part** |
| | 127.6 | - |

**Supplementary information:**

1. The exceeded voltage can be applied to only a part of the system such as the cell(s) in the battery system per Figure 6 of IEC 62619, if it is difficult to do it in using the whole battery system.

Results:
A – No Fire or Explosion
B – Fire
C – Explosion
D – The voltage of the measured cells or cell blocks did not exceed the upper limit charging voltage
E – The voltage of the measured cells or cell blocks did exceed the upper limit charging voltage
F – All function of battery system did operate as intended during the test.
G – All function of battery system did not operate as intended during the test.
H – Other (Please explain): ___

| 8.2.3 | TABLE: Overcharge control of current (battery system) | | | P |
|---|---|---|---|---|
| **Sample No.** | **OCV at start of test, (V dc)** | **Max. Charging Current, (A)** | **Max. Charging Voltage, (V dc)** | **Results** |
| 2023020019-001 | 95.82 | 54 | 116 | A, D, F |
| - | - | - | - | - |

**Supplementary information:**

Results:
A – No fire or Explosion
B – Fire
C – Explosion
D – Overcurrent sensing function of BMU did operate and then charging stopped
E – Overcurrent sensing function of BMU did not operate and then charging stopped
F – All function of battery system did operate as intended during the test.
G – All function of battery system did not operate as intended during the test.
H – Other (Please explain): ____

| IEC 62619 | | | |
|---|---|---|---|
| Clause | Requirement + Test | Result - Remark | Verdict |

| 8.2.4 | TABLE: Overheating control (battery system) | | P |
|---|---|---|---|
| **Model No.** | **OCV at start(SOC 50%) of test, V dc** | **Maximum Charging Current, A** | **Maximum Charging Voltage, V dc** |
| 2023020019-001 | 105.81 | 45 | 116 |
| - | - | - | - |
| - | - | - | - |
| **Maximum Specified Temperature of Battery System, °C** | | **Maximum Measured Cell Case Temperature, °C** | **Results** |
| 53 | | 53 | A, D, F |
| - | | - | - |
| - | | - | - |

**Supplementary information:**

Results:
A – No fire or Explosion
B – Fire
C – Explosion
D – Temperature sensing function of BMU did operate and then charging stopped
E – Temperature sensing function of BMU did not operate and then charging stopped
F – All function of battery system did operate as intended during the test.
G – All function of battery system did not operate as intended during the test.
H – Other (Please explain): ____

- End of test report -

**Test Report issued under the responsibility of:**

TÜVRheinland®

# TEST REPORT
# IEC 63056
# Secondary cells and batteries containing alkaline or other non-acid electrolytes - Safety requirements for secondary lithium cells and batteries, for use in electrical energy storage systems

| | |
|---|---|
| **Report Number. ..... :** | CN23JF8R 001 attachment 1 |
| **Date of issue..... :** | See cover page |
| **Total number of pages ..... :** | See cover page |
| **Name of Testing Laboratory preparing the Report ..... :** | TÜV Rheinland (Shanghai) Co., Ltd. |
| **Applicant's name..... :** | SolaX Power Network Technology (Zhejiang)Co., Ltd. |
| **Address..... :** | No. 288, Shizhu Road, Tonglu Economic Development Zone, Tonglu City, Zhejiang Province, 310000, P. R. China. |
| **Test specification:** | |
| **Standard ..... :** | IEC 63056: 2020 |
| **Test procedure ..... :** | CB Scheme |
| **Non-standard test method ..... :** | N/A |
| **TRF template used……:** | IECEE OD-2020-F1:2020, Ed.1.4 |
| **Test Report Form No. ..... :** | IEC63056A |
| **Test Report Form(s) Originator.... :** | UL(Demko) |
| **Master TRF..... :** | Dated 2020-10-15 |

**Copyright © 2020 IEC System of Conformity Assessment Schemes for Electrotechnical Equipment and Components (IECEE System). All rights reserved.**

This publication may be reproduced in whole or in part for non-commercial purposes as long as the IECEE is acknowledged as copyright owner and source of the material. IECEE takes no responsibility for and will not assume liability for damages resulting from the reader's interpretation of the reproduced material due to its placement and context.

If this Test Report Form is used by non-IECEE members, the IECEE/IEC logo and the reference to the CB Scheme procedure shall be removed.

**This report is not valid as a CB Test Report unless signed by an approved IECEE Testing Laboratory and appended to a CB Test Certificate issued by an NCB in accordance with IECEE 02.**

**General disclaimer:**

The test results presented in this report relate only to the object tested.
This report shall not be reproduced, except in full, without the written approval of the Issuing NCB. The authenticity of this Test Report and its contents can be verified by contacting the NCB, responsible for this Test Report.

Disclaimer: This document is controlled and has been released electronically.
Only the version on the IECEE Website is the current document version

| | |
|---|---|
| **Test item description..... :** | Lithium ion Rechargeable Battery System |
| **Trade Mark(s)..... :** | SOLAX POWER |
| **Manufacturer..... :** | Same as applicant |
| **Model/Type reference..... :** | See cover page |
| **Ratings..... :** | See copy of marking label and model list. |

**Responsible Testing Laboratory (as applicable), testing procedure and testing location(s):**

| | | | |
|---|---|---|---|
| ☐ | **CB Testing Laboratory:** | | |
| **Testing location/ address.....:** | | | |
| **Tested by (name, function, signature).....:** | | | |
| **Approved by (name, function, signature)...:** | | | |
| ☐ | **Testing procedure: CTF Stage 1:** | | |
| **Testing location/ address.....:** | | | |
| **Tested by (name, function, signature).....:** | | | |
| **Approved by (name, function, signature)...:** | | | |
| ☐ | **Testing procedure: CTF Stage 2:** | | |
| **Testing location/ address.....:** | | | |
| **Tested by (name + signature) .....:** | | | |
| **Witnessed by (name, function, signature)..:** | | | |
| **Approved by (name, function, signature)...:** | | | |
| ☐ | **Testing procedure: CTF Stage 3:** | | |
| ☐ | **Testing procedure: CTF Stage 4:** | | |
| **Testing location/ address.....:** | | | |
| **Tested by (name, function, signature).....:** | | | |
| **Witnessed by (name, function, signature)..:** | | | |
| **Approved by (name, function, signature)...:** | | | |
| **Supervised by (name, function, signature) :** | | | |

**List of Attachments (including a total number of pages in each attachment):**

**N/A**

**Summary of testing:**

**Tests performed (name of test and test clause):**

| Clause(s) | Test(s) |
|---|---|
| 7.4 | Electric insulation check during transport and installation |
| 7.6 | Protection against short circuit during transport and installation |
| 7.8 | Over discharge control of voltage (battery system) |
| 7.9 | Drop test |

**Testing location:**

**SRF testing and certification (Changzhou) Co., LTD.**

No.27 Chuangzhi Road, Kunlun Street, Liyang City, Jiangsu

**Summary of compliance with National Differences (List of countries addressed):**

☒ **The product fulfils the requirements of IEC 63056:2020 (insert standard number and edition and delete the text in parenthesis, leave it blank or delete the whole sentence, if not applicable)**

**Statement concerning the uncertainty of the measurement systems used for the tests**

(may be required by the product standard or client)

☐ **Internal procedure used for type testing through which traceability of the measuring uncertainty has been established:**

**Procedure number, issue date and title:**

Calculations leading to the reported values are on file with the NCB and testing laboratory that conducted the testing.

☐ **Statement not required by the standard used for type testing**

(Note: When IEC or ISO standard requires a statement concerning the uncertainty of the measurement systems used for tests, this should be reported above. The informative text in parenthesis should be delete in both cases after selecting the applicable option)

**Copy of marking plate:**

**The artwork below may be only a draft. The use of certification marks on a product must be authorized by the respective NCBs that own these marks.**

**See report CN23JF8R 001.**

| | |
|---|---|
| **Test item particulars .....:** | |
| **Classification of installation and use.....:** | To be defined in the end product |
| **Supply Connection .....:** | Not directly connected to the mains |
| **.....:** | |
| **Possible test case verdicts:** | |
| **- test case does not apply to the test object..... :** | N/A |
| **- test object does meet the requirement..... :** | P (Pass) |
| **- test object does not meet the requirement..... :** | F (Fail) |
| **Testing ..... :** | |
| **Date of receipt of test item..... :** | See report CN23JF8R 001 |
| **Date (s) of performance of tests ..... :** | See report CN23JF8R 001 |
| | |
| **General remarks:** | |
| "(See Enclosure #)" refers to additional information appended to the report.<br>"(See appended table)" refers to a table appended to the report.<br><br>**Throughout this report a ☐ comma / ☒ point is used as the decimal separator.** | |
| **Manufacturer's Declaration per sub-clause 4.2.5 of IECEE 02:** | |
| The application for obtaining a CB Test Certificate includes more than one factory location and a declaration from the Manufacturer stating that the sample(s) submitted for evaluation is (are) representative of the products from each factory has been provided.....: | ☐ **Yes**<br>☒ **Not applicable** |
| **When differences exist; they shall be identified in the General product information section.** | |
| **Name and address of factory (ies)..... :** | See report CN23JF8R 001 |
| **General product information and other remarks:**<br>**See report CN23JF8R 001.** | |

| IEC 63056 | | | |
|---|---|---|---|
| Clause | Requirement + Test | Result - Remark | Verdict |
| **4** | **PARAMETER MEASUREMENT TOLERANCES** | | |
| | Parameter measurement tolerances | | P |
| **5** | **GENERAL SAFETY CONSIDERATIONS** | | |
| **5.1** | **General** | | **P** |
| | Battery systems and the cells comply with the applicable general safety considerations of IEC 62619. | Complied with IEC 62619 | P |
| | Lithium-ion cells be operated within the operating region and the storage conditions. | | P |
| | Cells and batteries are safe under conditions of both intended use and reasonably foreseeable misuse..: | | P |
| **5.2** | **Insulation and wiring** | | **P** |
| | Voltage, current, altitude, and humidity requirements | | P |
| | Adequate clearances and creepage distances between connectors in accordance with IEC 60950-1:2005, 3.1 and 3.2 | | P |
| | Hazardous live parts of the battery system be protected to avoid the risk of electric shocks, including during installation. | Considered | P |
| | Mechanical integrity of the battery system and connections follow the requirements from the end-use equipment manufacturer or Annex A. | | P |
| | Maximum allowed number of series connections in the specification or instruction manual .....: | | P |
| **5.3** | **The peak voltage of charging** | | **P** |
| | Peak voltage of the alternating component of charging current is under the upper limit charging voltage, by monitoring the voltage of every single cell or cell block. | | P |
| | Encapsulation used to support cells within an outer casing | | P |
| **6** | **TYPE TEST CONDITIONS** | | |
| **6.1** | **General** | | **P** |
| **6.2** | **Test items** | | **P** |
| | Cells or batteries that are not more than six months old (See Table 1 of IEC63056) | Considered | P |
| | Capacity confirmation of the cells or batteries | Considered | P |

| IEC 63056 | | | |
|---|---|---|---|
| Clause | Requirement + Test | Result - Remark | Verdict |
| | Default ambient temperature of test, 25 °C ± 5 °C | Considered | P |
| **7** | **SPECIFIC REQUIREMENTS AND TESTS** | | |
| **7.1** | **Basic requirement** | | **P** |
| | Cells and battery systems comply with the tests of IEC62619 in addition to the test requirements of this document. | | P |
| **7.2** | **Resistance to abnormal heat** | | **N/A** |
| | Non-metallic materials on which parts at HAZARDOUS VOLTAGE are directly mounted, resistant to abnormal heat. | | N/A |
| | Ball pressure test according to IEC60695-10-2 at ($\Delta T$ + $T$max + 15 °C) ± 2 °C ..... : | See Table 7.2 | N/A |
| **7.3** | **Casing material of a battery system that can be transported for installation or maintenance** | | **N/A** |
| | Thermoplastic materials used for casing be of class V-2, V-1 or V-0 | Metal enclosure used | N/A |
| | Components mounted on V-1 CLASS MATERIAL and be separated from case material of V-2 CLASS MATERIAL by at least 13 mm of air, or by a solid barrier of V-1 CLASS MATERIAL..... : | | N/A |
| | Materials be tested at a thickness equal to the smallest thickness used in the application and classified in accordance with IEC 60695-11-10 ... : | | N/A |
| **7.4** | **Electric insulation check during transport and installation** | | **P** |
| | Hazardous live parts be covered or insulated against contact with the personnel during transport and installation. | Considered | P |
| | Insulation resistance test in an ambient temperature of 25 °C ± 5 °C tested in accordance with IEC 62133:2017, 5.2. | | P |
| | Ambient (°C); measured insulation resistance (MΩ); ≥ 5 MΩ..... : | | P |
| **7.5** | **Charging procedures for test purposes** | | **P** |
| | Prior to charging, the DUT have been discharged at 20 °C ± 5 °C at a constant current of 0,2 It A down to a specified final voltage | Considered | P |
| | Unless otherwise stated, the DUT is then charged in an ambient temperature of 25 °C ± 5 °C, using the method specified by the manufacturer. | | P |
| **7.6** | **Protection against short circuit during transport and installation** | | **P** |

| IEC 63056 | | | |
|---|---|---|---|
| Clause | Requirement + Test | Result - Remark | Verdict |
| | A safeguard is provided by the battery system manufacturer to reduce the risk of short circuit for personnel at the time of electrical installation or transport. | | P |
| | Where the battery pack is divided into parts for the purpose of transportation, protective safeguards shall be provided not only for the battery system, but also for each part. | | P |
| | Short circuit the DUT with total external resistance of (30 mΩ ± 10 mΩ) × module configuration (= number of series connections / number of parallel connections) or less than 5 mΩ, whichever is higher, and less than 100 mΩ. | | — |
| | Results: no rupture, no fire, no explosion ..... : | See Table 7.6 | P |
| **7.7** | **Protection for reverse connection** | | **N/A** |
| | When a battery system has multiple battery packs or modules, the battery system shall remain in a safe condition at the time of installation, even if one of the battery packs or modules is connected with opposite polarity to the others. | Prevent a reverse connection | N/A |
| | A DUT has a feature that prevents a reverse connection, or when modules or battery packs are connected in the battery system with the BMS at the factory, test is not required. | | N/A |
| | Test the battery system with one module reverse connected. | | — |
| | Results: no rupture, no fire, no explosion ..... : | | N/A |
| **7.8** | **Overdischarge control of voltage (battery system)** | | **P** |
| | The BMS shall control the cell voltage during discharging above the lower limit discharging voltage of the cells. | | P |
| | Monitor the cells voltage while overdischarge the battery system or part of system. | | — |
| | Results: BMS interrupt the overdischarging current by an automatic disconnect of the main contactors: | See Table 7.8 | P |
| **7.9** | **Drop test** | | **P** |
| 7.9.1 | General | | P |
| | This test is performed to simulate a drop during installation and maintenance | | P |
| 7.9.2 | Whole drop test (for DUT ≤ 50kg) | BMS: 13kg<br>Battery Module: 27kg | P |

| IEC 63056 | | | |
|---|---|---|---|
| Clause | Requirement + Test | Result - Remark | Verdict |
| | The DUT is dropped one time from a height shown in Table 2 onto a flat concrete or metal floor. | BMS: 100cm<br>Battery Module: 50cm | P |
| | Results: no fire, no explosion ..... : | See Table 7.9 | N/A |
| 7.9.3 | Edge and corner drop test (for DUT > 50kg) | | N/A |
| | Test arrangements as shown in Figure 3, Figure 4 and Figure 5. The DUT is dropped two times from a height shown in Table 2 onto a flat concrete or metal floor, with reproducible impact points for the shortest edge drop impact and the corner impacted. | | N/A |
| | Results: no fire, no explosion ..... : | | N/A |
| **8** | **INFORMATION FOR SAFETY** | | |
| | Information for safety in accordance with IEC 62619 | | P |
| **9** | **MARKING AND DESIGNATION (REFER TO CLAUSE 5 OF IEC 62620)** | | |
| | The marking items shown in Table 1 in IEC 62620 indicated on the cell, battery system or instruction manual. | | P |
| | Cell or battery system has clear and durable markings | | P |
| | Cell designation | | N/A |
| | Battery designation | See battery module label | P |
| | Battery structure formulation | See battery module label | P |
| **ANNEX A** | **Wiring, connections and supply** | | **P** |
| A.1 | Summarizes wiring, connections and supply, as addressed in IEC 60950-1:2005. | | P |
| 3.1.1 | Current rating and overcurrent protection | | P |
| 3.1.2 | Protection against mechanical damage | | P |
| 3.1.3 | Securing of internal wiring | | P |
| 3.1.4 | Insulation of conductors | | P |
| 3.1.5 | Beads and ceramic insulators | No such part | N/A |
| 3.1.6 | Screws for electrical contact pressure | | P |
| 3.1.7 | Insulating materials in electrical connections | | P |
| 3.1.8 | Self-tapping and spaced thread screws | | P |
| 3.1.9 | Termination of conductors | | P |

| IEC 63056 | | | |
|---|---|---|---|
| Clause | Requirement + Test | Result - Remark | Verdict |
| | 10 N pull test | | P |
| 3.1.10 | Sleeving on wiring | | P |
| 3.2.1.2 | Connection to a d.c. mains supply | | P |
| 3.2.5.2 | DC power supply cords | No such part | N/A |
| 3.2.6 | Cord anchorages and strain relief | No such part | N/A |
| | Mass of equipment (kg), pull (N) .....: | | — |
| | Longitudinal displacement (mm) .....: | | — |
| 3.2.7 | Protection against mechanical damage | | P |
| 3.2.8 | Cord guards | No such part | N/A |
| | Diameter or minor dimension D (mm); test mass (g) .....: | | — |
| | Radius of curvature of cord (mm) .....: | | — |
| A.2 | Summarizes wiring, connections and supply, as addressed in IEC 62368-1. | | P |
| 5.4 | Isolation materials and requirements (including clearances and creepage distances) | | P |
| G.7 | Mains supply cords | No such part | N/A |
| G.7.1 | General requirements | | N/A |
| | Type .....: | | — |
| G.7.2 | Cross sectional area (mm$^2$ or AWG).....: | | N/A |
| G.7.3 | Cord anchorages and strain relief for non-detachable power supply cords | | N/A |
| G.7.3.2 | Cord strain relief | | N/A |
| G.7.3.2.1 | Requirements | | N/A |
| | Strain relief test force (N) .....: | | N/A |
| G.7.3.2.2 | Strain relief mechanism failure | | N/A |
| G.7.3.2.3 | Cord sheath or jacket position, distance (mm).....: | | N/A |
| G.7.3.2.4 | Strain relief and cord anchorage material | | N/A |
| G.7.4 | Cord Entry | | N/A |
| G.7.5 | Non-detachable cord bend protection | | N/A |
| G.7.5.1 | Requirements | | N/A |
| G.7.5.2 | Test method and compliance | | N/A |
| | Overall diameter or minor overall dimension, D (mm).....: | | — |
| | Radius of curvature after test (mm) .....: | | — |

| IEC 63056 | | | |
|---|---|---|---|
| Clause | Requirement + Test | Result - Remark | Verdict |
| G.7.6 | Supply wiring space | | P |
| G.7.6.1 | General requirements | | P |
| G.7.6.2 | Stranded wire | | P |
| G.7.6.2.1 | Requirements | | P |
| G.7.6.2.2 | Test with 8 mm strand | | P |

| IEC 63056 | | | |
|---|---|---|---|
| Clause | Requirement + Test | Result - Remark | Verdict |

| 7.2 | TABLE: Resistance to abnormal heat (ball pressure test ) | | N/A |
|---|---|---|---|
| | Upper limit ambient temperature Tmax of the battery system specified by the battery system manufacturer .....: | | — |
| | Maximum temperature rise ΔT of thermoplastic parts during the most adverse operation at 25 °C ± 5 °C specified by the battery system manufacturer .....: | | — |
| | Allowed impression diameter (mm) .....: | ≤ 2 mm | — |

| Part | Test temperature (°C) | Impression diameter (mm) |
|---|---|---|
| - | - | - |
| - | - | - |
| **Supplementary information:** | | |

| 7.3 | TABLE: Casing material of a battery system that can be transported for installation or maintenance | | | | N/A |
|---|---|---|---|---|---|
| **Part** | **Manufacturer of material** | **Type of material** | **Thickness (mm)** | **Flammability class** | **Evidence** |
| - | - | - | - | - | - |
| - | - | - | - | - | - |
| **Supplementary information:** | | | | | |

| 7.4 | TABLE: Electric insulation check during transport and installation | | P |
|---|---|---|---|
| **Part** | **Test voltage (V)** | **Insulation resistance (Ω)** | **Limit (Ω)** |
| Battery+/- to PE | 500Vd.c. | >1000MΩ | 5M |
| Battery+/- to CAN | 500Vd.c. | >1000MΩ | 5M |
| **Supplementary information:** | | | |

| IEC 63056 | | | |
|---|---|---|---|
| Clause | Requirement + Test | Result - Remark | Verdict |

| 7.6 | TABLE: Protection against short circuit during transport and installation | | | | | P |
|---|---|---|---|---|---|---|
| **DUT** | **Ambient (25°C ± 5°C)** | **OCV at start of test (V dc)** | **Max discharge current(A)** | **Maximum Case Temperature Rise ΔT (°C)** | **Test termination** | **Results** |
| T-BAT HS5.0 | 25.4 | 691 | 1870 | 0 | The DUT protected | B, C, F |
| - | - | - | - | - | - | - |

**Supplementary information:** The fuse was break immediately after short circuit, and there is no obvious temperature rise during testing.

Test termination:

A - The test was completed after 6 h;

B - The test was completed after the cell casing cooled to 20% of the maximum temperature rise

Results:

C - No fire or Explosion;

D - Fire;

E - Explosion;

F - Other (Please explain): Protected by the overcurrent device.

| 7.7 | TABLE: Protection for reverse connection | | | | N/A |
|---|---|---|---|---|---|
| **Battery system** | **Ambient (25°C ± 5°C)** | **SOC for installation or maintenance** | **Reverse connection of a module** | | **Results** |
| | | | **Charge the battery system** | **Discharge the battery system** | |
| - | - | - | - | - | - |
| - | - | - | - | - | - |

**Supplementary information:**

Charge / Discharge the battery system:

A - Fully charged or discharged.

B – Charging or discharging is stopped by a safety protection.

Results:

C - No fire or Explosion;

D - Fire;

E - Explosion;

F - Other (Please explain):___

| IEC 63056 | | | |
|---|---|---|---|
| Clause | Requirement + Test | Result - Remark | Verdict |

| 7.8 | TABLE: Overdischarge control of voltage (battery system) | | | | | P |
|---|---|---|---|---|---|---|
| DUT | Ambient (25°C ± 5°C) | OCV at start of test (V dc) | Discharge current | | Measured minimum cell voltage (V) | Results |
| | | | 0.2 It (A) | Maximum discharge current (A) | | |
| T-BAT HS5.0 | 23.4 | 107.0 | 10 | 45 | 2.835 | A |
| - | - | - | - | - | - | - |

**Supplementary information:**

See page 6 “Test item particulars” for the lower limit discharging voltage of the cell

DUT:

Battery system or Part of battery system

Results:

A - The BMS interrupt the over discharging current by an automatic disconnect of the main contactors before the cell voltage dropped below lower limit discharging voltage of the cell.

B - Measured minimum cell voltage less than lower limit discharging voltage of the cell.

| 7.9 | TABLE: Drop test | | | P |
|---|---|---|---|---|
| DUT | Mass of the test unit (kg) | Height of drop (m) | OCV at start of test (V dc) | Results |
| Battery Module: TP-HS25 | 27 | 0.5 | 53.2Vdc for battery module | A |
| BMS: TBMS-MCS0800 | 13 | 1.0 | - | A |

**Supplementary information:**

Results:

A - No fire or Explosion;

B - Fire;

C - Explosion;

D - Other (Please explain):

- End of test report -